magic LAB®
Versatile and unique

IKA®

designed
to work perfectly

Seamless transition from laboratory to production

The magic LAB® is a unique and multi-functional laboratory machine. It is designed for inline mixing, dispersing, wet milling, homogenization and the incorporation of powders into liquids.

The magic LAB® is mainly used for the development of new products and processes as well as for the optimization of existing procedures, particularly in the chemical, cosmetics, pharmaceutical, and food industries.

It is the ideal simulation machine for continuous processes and for enrichment and batch procedures. Its versatility is especially useful in educational institutions such as universities and schools.

The dispersing parameters of the magic LAB® and the IKA® production machines are identical - providing the perfect prerequisite for a reliable scale-up.

Conversely, a scale-down is just as reliable, enabling the simulation of existing production plants.

DIN EN ISO 9001

For more information, please visit our website:

www.ikaprocess.com

IKA®+

Features

> A modular design
> Simple handling
> Infinitely variable speed adjustment
> Extensive control features

IKA® QUALITY

IKA®+

> Simple handling
> Fast set up and conversion
> Installation video
> Storage box for individual parts

Easy module change

Food
> Mayonnaise
> Ketchup
> Mustard
> Sauces
> Fruit juices
> Dressings

Chemical industry
> Dyes + paints
> Waxes
> Detergents
> Resins

Cosmetics
> Creams
> Lotions
> Toothpaste

Pharmaceutical industries
> Vaccines
> Ointments
> Vitamins
> APIs

1 basic unit – 8 possibilities

DR/DRS module
For the production of the finest emulsions and suspensions as well as for the simulation of single-pass processes

UTC module
Dispersing/mixing in batch mode

MK/MKO module
Wet milling by means of a milling tool with an adjustable gap. Emulsification (MK) and de-agglomeration (MKO) of viscous products

MCD module
Wet milling of oily, viscous or pasty products

magic LAB® – UTL basic module

For simple homogenization tasks

A unique and versatile machine in laboratory scale for the development of new products and for product and process optimization.
The eight exchangeable mixing modules make it the ideal machine for continuous, recirculation and batch processes. Standard design with ULTRA-TURRAX® UTL module.

Modular design

Depending on the application, the basic unit can be modified quickly using various working modules.

Thus it can be perfectly adjusted to the product or procedural objective.

DBI module

Direct feeding of liquid and solid additives into the dispersing chamber

MHD module

Entry of high concentrations of solids in a single pass and simulation of continuous processes

CMS module

Lump-free and dust-free incorporation of powders into liquids in recirculation mode

Rotor-stator system

The best in dispersing technology

A high circumferential speed and narrow gap for the entry of energy into the product by means of shearing and high turbulence.

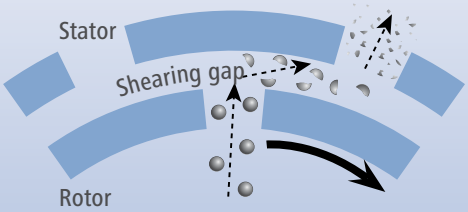

ULTRA-TURRAX® Inline | **UTL 2000**

Example applications

> Sauces
> Fruit juices
> Jams
> Sugar solutions
> Dyes
> Binding agents
> Liquid resins
> Lotions
> Adhesives
> Stabilizing agents

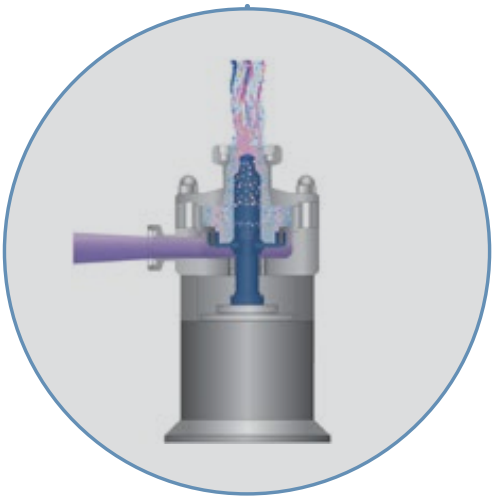

The UTL is a single-stage dispersing machine for the production of emulsions and suspensions with a coarse or medium particle size and a narrow particle size distribution. There are numerous rotor-stator variants, enabling the adaption of the machine to the respective application.

Regardless of the machine size, the UTL maintains a constant circumferential speed and can therefore be scaled up without problems.

UTL	
Speed range [rpm]	3,000 – 26,000
Throughput [l/h]	50 – 200
Circumferential speed [m/s]	5 – 40

Colloid/cone mill | MK/MKO 2000

Example applications

> Colloidal solutions
> Microsuspensions
> Metal oxide suspensions
> Microencapsulation
> Mustard
> Ointments
> Pigments
> Ceramic suspensions
> Mayonnaise

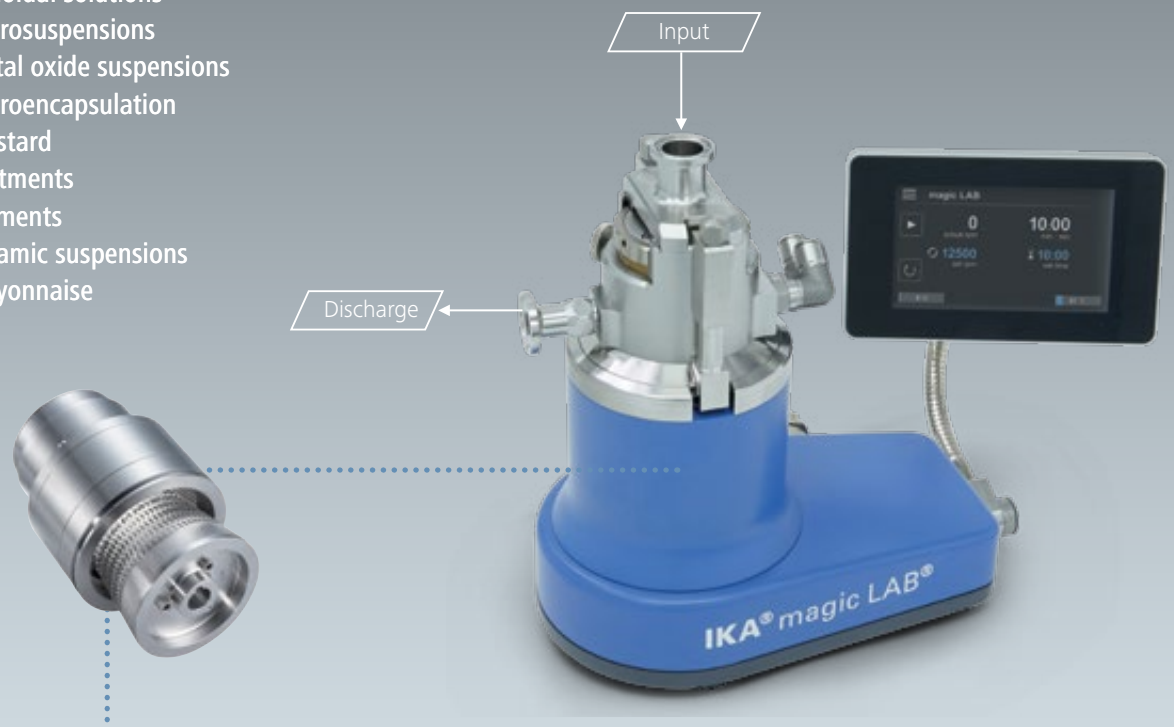

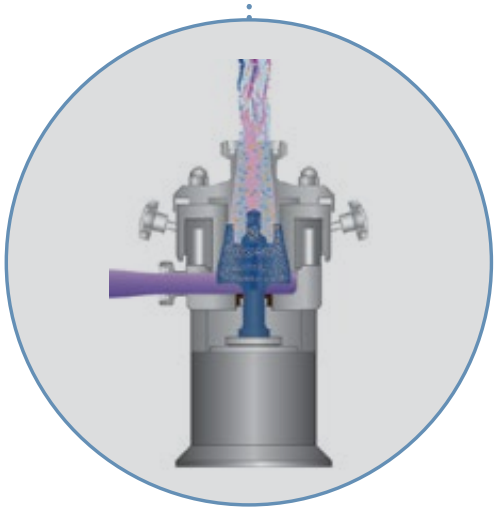

The MK is used for wet milling, deagglomeration and the production of viscous emulsions. The high circumferential speed, the large tool surface and the extremely small gap generate high shearing forces. The stator can be infinitely adjusted to obtain the required distance between the rotor and stator.

The MKO enhances the possibilities of the colloid mill. Due to its innovative design, this machine is suitable for the wet milling of porous, crystalline products and the deagglomeration of viscous products such as pastes as well as for the processing of abrasive products such as metal oxide or ceramic suspensions. The milling gap - which is even smaller than that of the MK - can be infinitely adjusted to ensure the passage of all particles. The surfaces - which are partially or fully covered with a rough, extremely hard and wear-resistant coating depending on the tool design - enable to meet the objective of the process.

The MKO can be operated in recirculation mode with low-viscosity products, but especially for viscous products, the single-pass process is the usual production method.

MK | MKO	
Speed range [rpm]	3,000 – 26,000
Throughput [l/h]	10 – 1,000
Circumferential speed [m/s]	5 – 40

DISPAX-REACTOR® Inline | DR/DRS 2000

Example applications

> Creams
> Lotions
> Toothpaste
> Fruit juices
> Salt solutions
> Catalysts
> Lacquers
> Polymer emulsions
> Pesticides
> Herbicides
> Fungicides

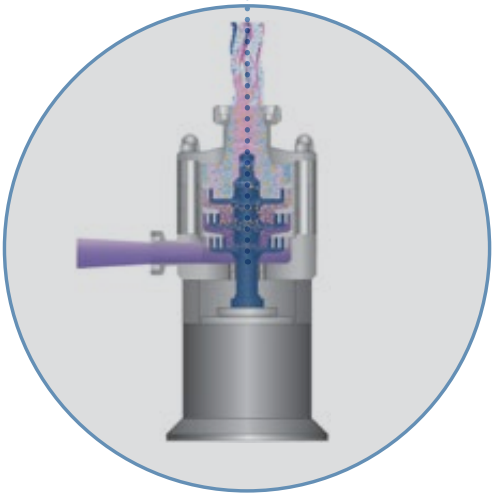

The DR/DRS is a high-shear dispersing machine for the production of microemulsions and ultra-fine suspensions, for wet milling and for dissolving processes. Whilst the production machines of type DR are operated with standard circumferential speeds of approx. 23 m/s and 3 tools, with the magic LAB®, the fast-running variant of type DRS with circumferential speeds of up to 40 m/s and 2 tools in series can also be simulated.

Thanks to the freely configurable generators, which are arranged in series, the process objectives are achieved after a single pass. The multi-stage design has the additional advantage of enabling the combination of dispersing tools with different characteristics. In the case of challenging products, the quality can be improved by means of a narrow particle size spectrum.

DR	
Speed range [rpm]	3,000 – 26,000
Throughput [l/h]	50 – 200
Circumferential speed [m/s]	5 – 40

Inline disperser | **DBI 2000**

Example applications

> Sun cream
> Drinks
> Ointments
> Mayonnaise, dressings
> Lacquers and paints
> Starch solutions
> Greases

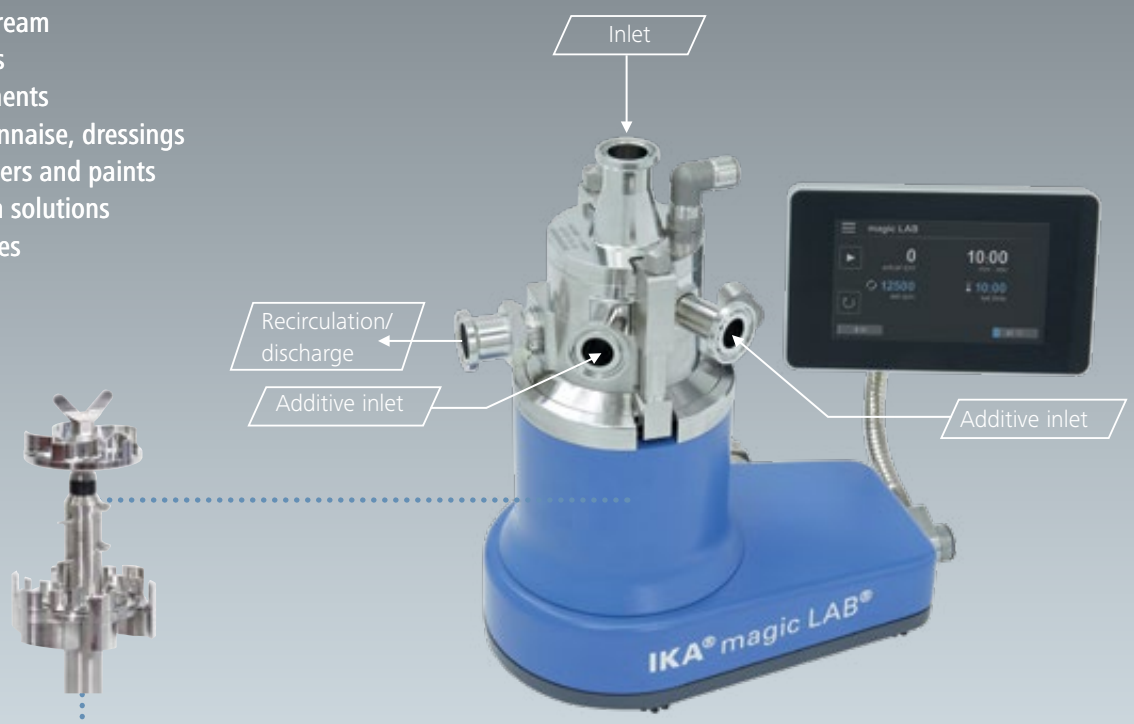

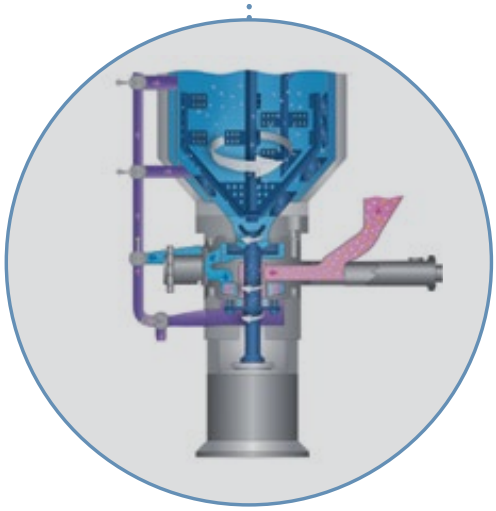

The DBI is a high-performance mixing and dispersing machine for the production of finest emulsions and suspensions.
To enable this, both solid and liquid additives are incorporated into a base liquid.

The unique device combines high flow speeds, even particle sizes reduction, and effective homogenization. Solid and liquid additives are fed directly into the dispersing chamber, which prevents the formation of lumps and ensures a fast process flow.

DBI	
Speed range [rpm]	3,000 – 20,000
Throughput [l/h]	1,500
Circumferential speed [m/s]	5 – 30

Corundum disk mill | MCD 2000

Example applications

Fine milling of:
> Mustard
> Chili
> Spice pastes
> Nuts
> Almonds
> Sesame
> Cocoa
> Soy beans
> Fruits
> Vegetables
> Fish pastes

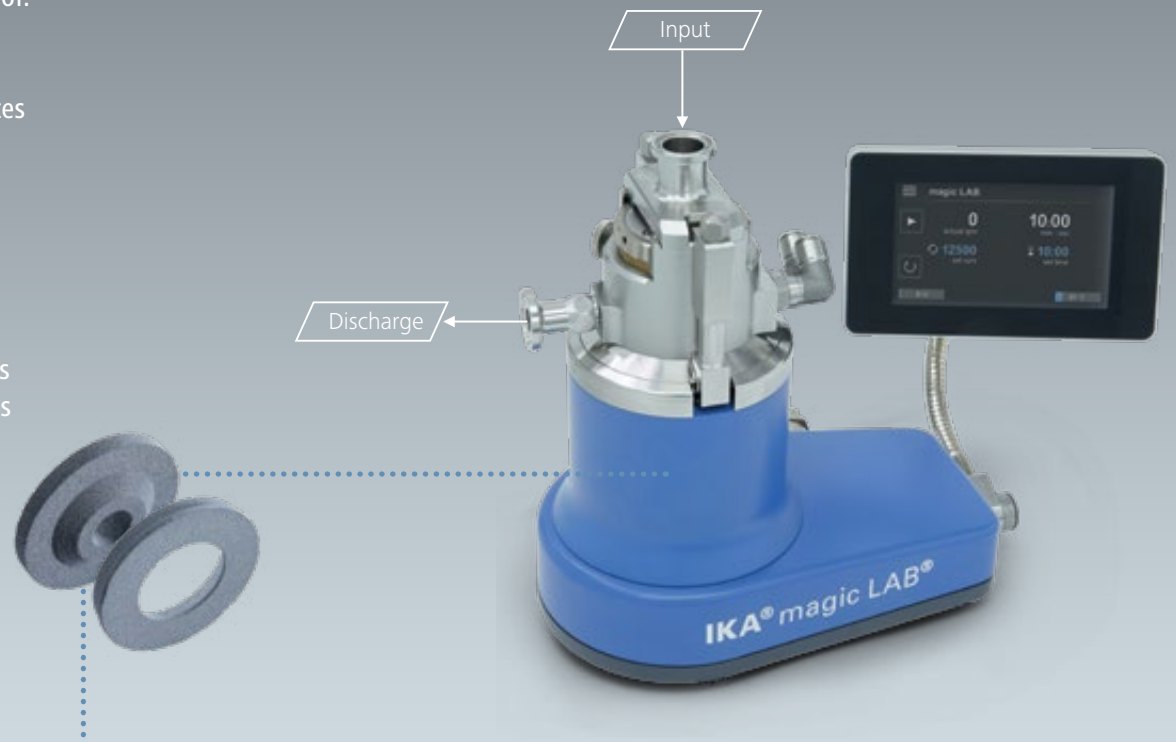

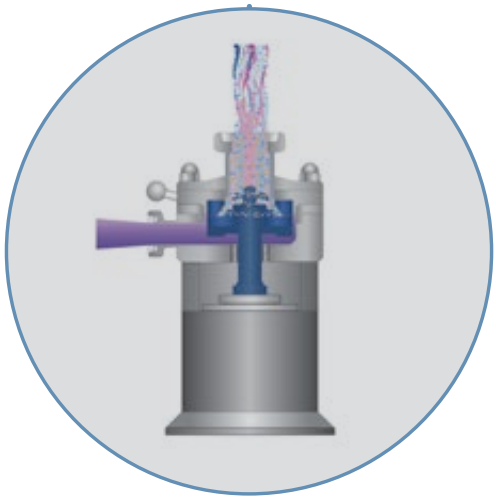

Corundum disk mills are for the ultra-fine milling of granules and tough pastes and for the wet milling of viscous products or fruits with a high liquid content.

The axially adjustable stator is pressed against the rotor, which runs at high speed. Thanks to the high shearing forces, the product is finely ground between the rotor and stator and is then discharged. A cooling jacket that is integrated into the milling chamber prevents the processed products from overheating.

MCD	
Speed range [rpm]	3,000 – 15,000
Flow rate [kg/h]	1 – 20
Circumferential speed [m/s]	5 – 23

ULTRA-TURRAX® | UTC

Example applications

> Lotions
> Waxes
> Polishes
> Gelling agents
> Color distribution
> Polymer emulsions

From an inline to a batch device
Turn the magic LAB® upside down, give it an UTC tool kit and you can start making the preparation in a beaker glass.

Batch dispersing
Batch dispersing is particularly suitable for small quantities. The required shear forces can be estimated here and rheological changes such as structure and viscosity, etc. can be detected quickly.

UTC	
Speed range [rpm]	10,000 – 24,000
Batch volume [l]	0.1 – 2
Circumferential speed [m/s] *	6 – 16

* With standard tool 18G

Single-pass powder incorporation | MHD 2000

Example applications

> Fertilizers
> Vitamins
> Pectins
> Guar gum
> Starches
> Cellulose
> Flour
> Fillers

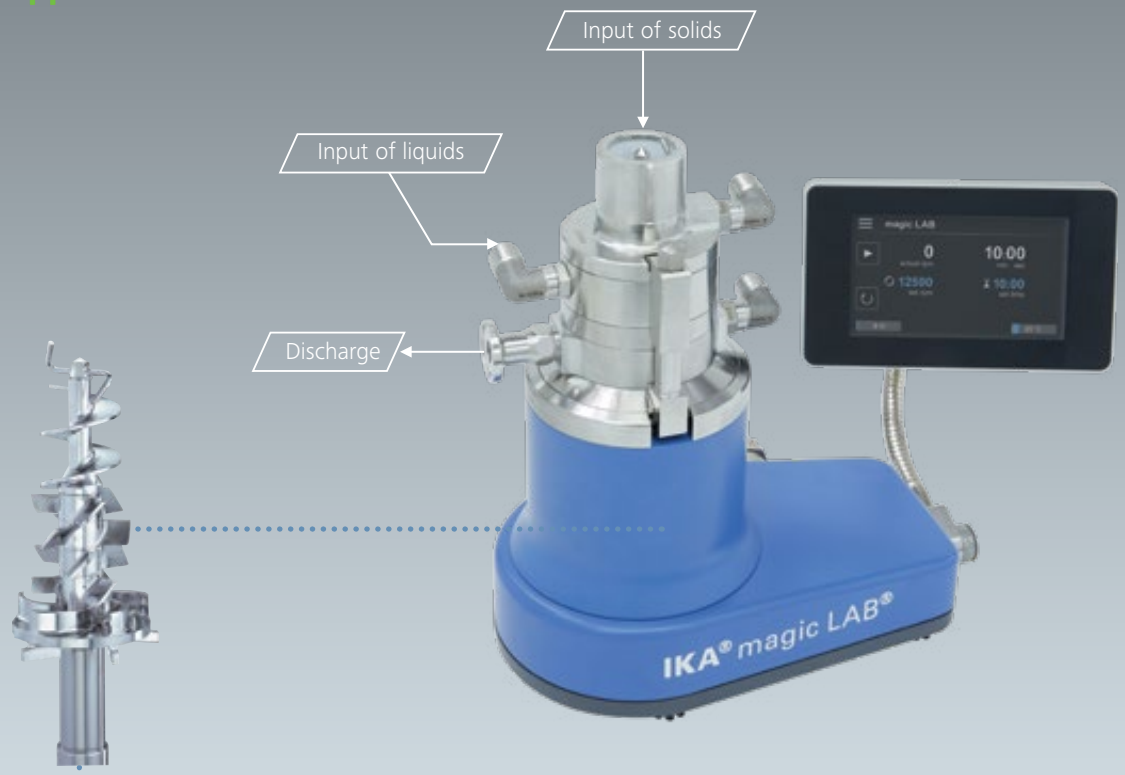

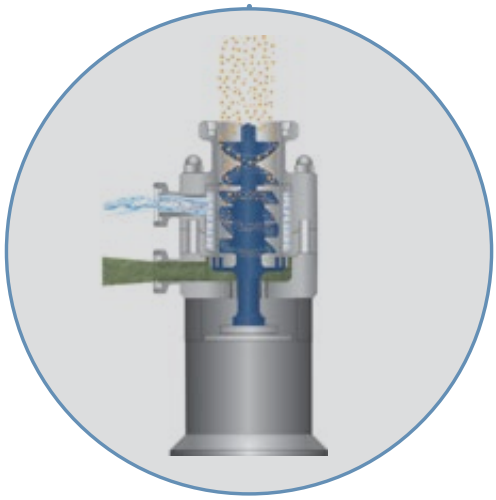

The MHD can be used for quantity proportional incorporation of even high concentrations of solids into low- to high-viscosity liquids in a single pass. This is a highly efficient process, dust-free and with lowest temperature increase in the product.

The MHD mixes the solids and liquids and ensures a homogeneous final product. The MHD has a unique, patented design that does not require suction to draw in the powders, which essentially eliminates air inclusions.

MHD	
Speed range [rpm]	3,000 – 20,000
Throughput [l/h]	30
Circumferential speed [m/s]	5 – 30

MHD setup example

This setup of the pilot plant enables the exact simulation of the process technology in production. A liquid is inserted into a storage tank. At the same time, the solid is fed using a powder dosing device. The MHD disperses and dissolves the powder in a recirculation process or - depending on the quantity - in a single pass. In the recirculation process, the resulting intermediate product serves as the liquid base into which further solids are dosed in accordance with the required quantity ratio in the subsequent process. To ensure the best possible product quality, the premixed product can be sheared again in a second step with an MKO cone mill.

Powder incorporation in a recirculation process | CMS 2000

Example applications

> Hydrocolloids
> Aluminum solutions
> Starch solutions
> Calcium carbonate
> Milk powder
> Fumed silica
> Carbopol

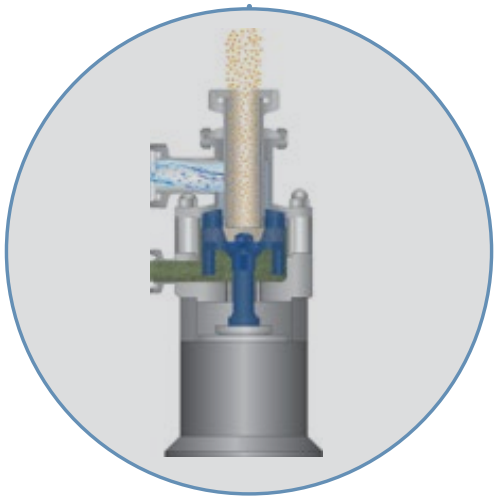

The CMS was developed for the dust-free incorporation and dispersing of powdery solids into liquids. It uses a specially developed rotor that generates a high suction force, thus sucking in the solid and incorporating it into the liquid. The liquid is circulated until all of the powder has been incorporated.

CMS	
Speed range [rpm]	3,000 – 16,000
Throughput [l/h]	1,000
Circumferential speed [m/s]	5 – 24

CMS setup example

The CMS peripheral equipment is the perfect supplement to the CMS module. It contains all parts required to simulate the batch recirculation process for powder incorporation. Liquid is placed into the tank and powder into the funnel. Once the CMS has been switched on, the liquid circulates and the resulting vacuum sucks in and disperses the powder. Once the batch is ready, the valve is switched and the product is discharged.

The CMS peripheral equipment offers a complete solution for wetting of the most difficult of powders.

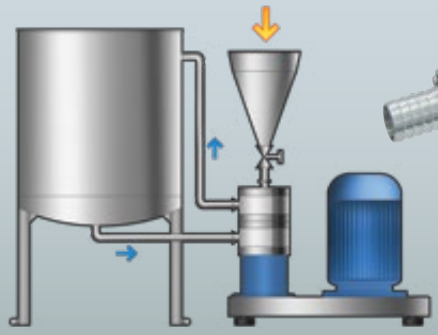

Micro-Plants

1 l MICRO-PLANT

The 1 l micro-plant is ideally suited for working in a recirculation process. The system has an open funnel with a 1-liter capacity.
The micro-plant is available as an extension kit for the modules UTL / MK / MKO / DR / DRS / MCD / DBI.

2 l MICRO-PLANT

The 2 l micro-plant was specially developed for dispersing in a recirculation process. The 2-liter funnel has a temperature-controllable double jacket. Optionally, the funnel can be closed with a lid, thus enabling to work under pressure/ vacuum. The machine is available as an extension kit for the modules UTL / MK / MKO / DR / DRS / MCD / DBI.

Transport box | Special design

Practical tool case for accessories

The IKA® magic LAB® is supplied with a practical tool case for accessories. Included is a tool set for maintenance and modification of the machine.
Dimensions: 450 x 370 x 110mm

Picture: Tool case with optional accessories

magic LAB® XP

The magic LAB® XP is an upgraded version of the magic LAB®. It combines the low throughputs and production quantities of the magic LAB® with higher requirements pertaining to process parameters. It was developed for applications that are subject to one or more of the following requirements:

> High pressure/vacuum
> High power requirement
> Processing of abrasive products

magic LAB® - the heart of the magic PLANT inline

The magic PLANT was designed especially for the simulation of the IKA SPP/MP/CD/CM process plants and for product requirements on a small scale.

The IKA® magic PLANT is an extremely versatile, multi-functional process plant. Depending on the field of application, it can be converted very easily into three different designs.

magic PLANT inline

In the inline execution, the magic PLANT is used in recirculation or continuous mode.
The integrated high-performance inline disperser magic LAB® is directly mounted to the bottom of the vessel. The modular design with exchangeable dispersing tools enables easy adjustment to product requirements. The machine is ideally suited for homogenization, emulsification, wet milling and dispersing.

magic PLANT basic

Batch mixing of low-viscosity to high-viscous products.

The components are inserted into the mixing vessel where they are mixed by means of the agitator.

magic PLANT powder

For drying or mixing of bulk solids.

The tilting of the vessel achieves optimum mixing and drying performances.

Take a look at the video!
www.ikaprocess.com

IKA® laboratory device software

Features

> Data recording
> Workload reduction
> Time savings
> Automation
> Reproducibility

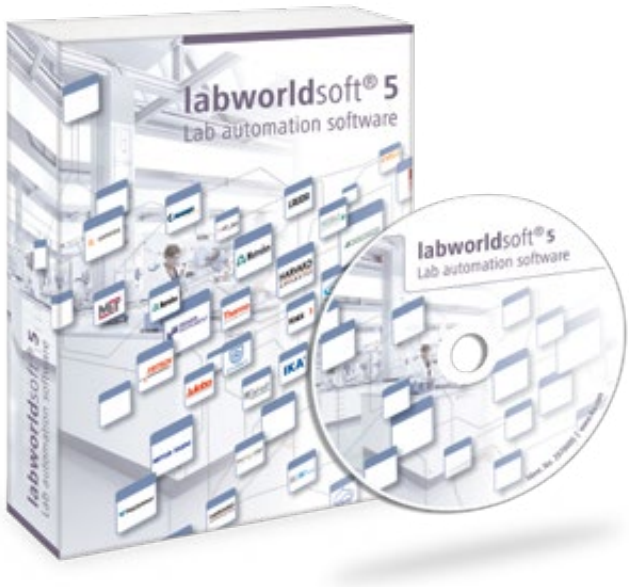

The labworldsoft® software by IKA® enables the networking of up to 64 laboratory devices. These can be controlled via a PC at the same time. As well as IKA® products, laboratory devices of other manufacturers can be integrated with labworldsoft®.

This makes the automation of your laboratory experiments and procedures simpler and more efficient.

IKA® offers more

Customization

IKA® products supposed to fully meet your requirements. That's why we offer solutions that are specially adapted for those requirements.

From the initial planning stages to the final product realization, IKA® technology and service departments are at your side, offering a range of services:

> Designing complete production plants
> Performing test runs for the development new products
> Planning and implementation of mechanical, electrical and pneumatic installations
> Commissioning, test operations and training of operating personnel
> Qualification

Aftersales

After project completition, our experienced engineers, electricians, application technicians, and assemblers will be happy to help you with the following additional services:

> Technical advice for questions concerning operation, process and maintenance of IKA® machines and plants
> Spare parts service
> Repair service
> Modification

Develop – optimize – scale up from laboratory to production

When new products are developed, the processes are first developed and tested in pilot plants. Tests on a laboratory scale are used to validate changed recipes and ingredients.

Thanks to the identical design and dispersion parameters, the IKA® systems enable a reliable scale-up with the same product quality.

Subject to technical changes

201910_magic LAB_Brochure_IWS_EN_wop_94000211

IKA®+

Learn more

for further information on IKA and IKA products, please visit our website

www.ikaprocess.com

IKA® Worldwide

USA

IKA Works, Inc.
Phone: +1 910 452-7059
process@ikausa.com

China

IKA Works Guangzhou
Phone: +86 20 8222 1771
Sales-Proc@ika.cn

Malaysia

IKA Works (Asia) Sdn Bhd
Phone: +60 3 6099-5666
sales.process@ika.my

India

IKA India Private Limited
Phone: +91 80 2625 3900
process@ika.in

Japan

IKA Japan K.K.
Phone: +81 6 6730 6781
info@ika.ne.jp

Brazil

IKA do Brasil
Phone: +55 19 3772-9600
sales@ika.net.br

Korea

IKA Korea. Ltd.
Phone: +82 2 2136 6800
info@ika.kr

United Kingdom

IKA England LTD
Phone: +44 1865 986 162
sales.england@ika.com

Vietnam

IKA Vietnam Company Limited
Phone: +84 28 38202142
sales.proc-vietnam@ika.com

IKAworldwide | #lookattheblue

IKA®-Werke GmbH & Co. KG
Janke & Kunkel-Str. 10
79219 Staufen
Germany

Phone: +49 7633 831-0
Fax +49 7633 831-907

process@ika.de
www.ikaprocess.com

IKA® German technology